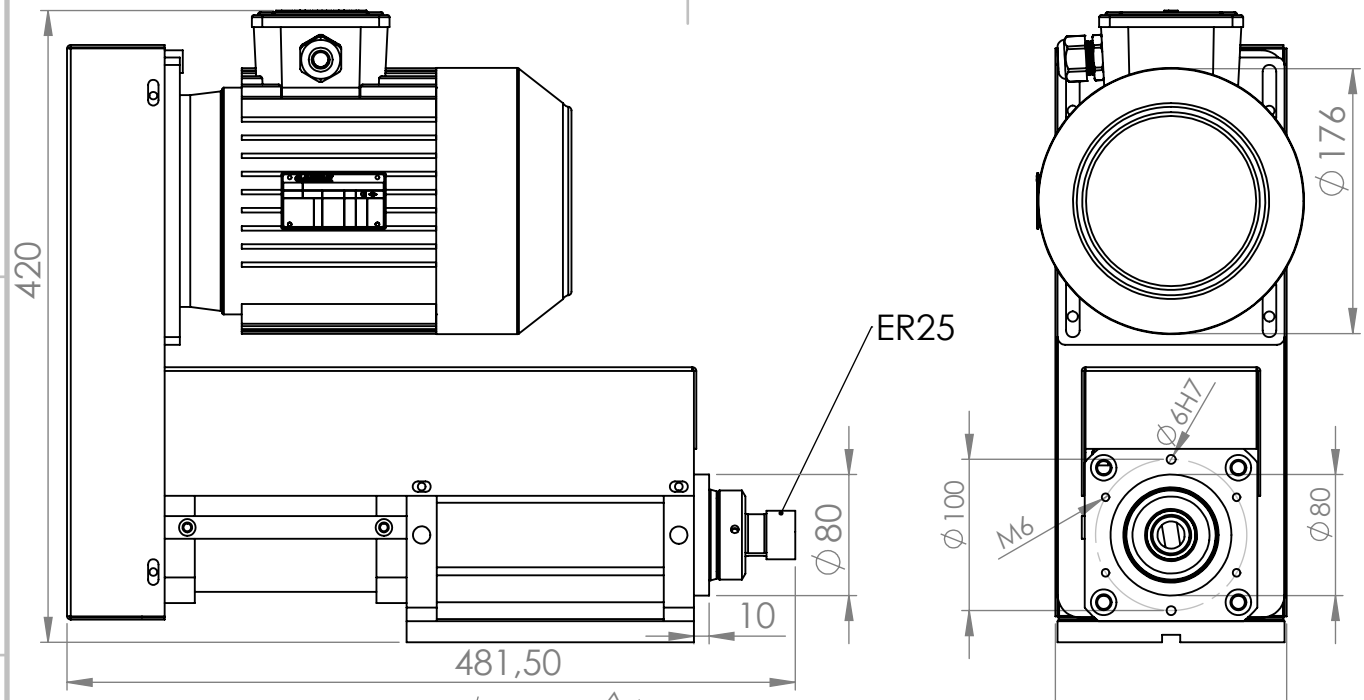

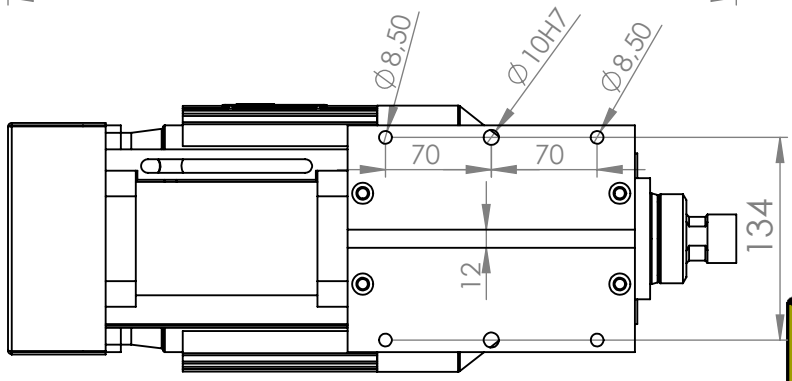

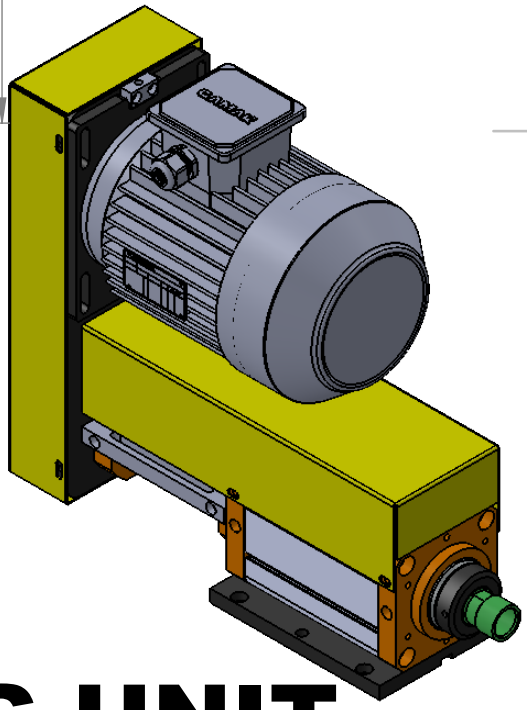

DU-16 DRILLING UNIT

TOTAL STROKE/TOPLAM STROK	90MM
MOTOR RATING/MOTOR GÜCÜ	2,2 KW
MOTOR REV./MOTOR DEVİR	1400 RPM
MAX.DRILLING CAPACITY/MAX. DELME KAPASİTESİ	13MM
AIR CONNECTION/HAVA BAĞLANTISI	10MM
OPERATING PRESSURE/ÇALIŞMA BASINCI	4-8 BAR
BRAKING STROKE/KESME AYARLI DELME	30MM(60MM OP.)
WEIGHT/AĞIRLIK	
INTER CHANGABLE PULLEYS/DEĞİŞTİRİLEBİLİR KASNAK	2 ADET